2024 IEEE International Conference on Information Technology, Electronics and Intelligent Communication Systems (ICITEICS)
Karnataka, India. Jun 28-29, 2024

2024 IEEE International Conference on Information Technology, Electronics and Intelligent Communication Systems (ICITEICS) | 979-8-3503-8269-3/24/$31.00 ©2024 IEEE | DOI: 10.1109/ICITEICS61368.2024.10625102

Emotion Detection based on Text and Emojis

Anushka Joseph
Dept. of Computer Engineering
Don Bosco Institute of Technology
Mumbai-400 070, India
221emily0008@dbit.in

Shanaya Carvalho
Dept. of Computer Engineering
Don Bosco Institute of Technology
Mumbai-400 070, India
221shanaya0017@dbit.in

Nicole Saldanha
Dept. of Computer Engineering
Don Bosco Institute of Technology
Mumbai-400 070, India
221nicole0006@dbit.in

Dr. Phiroj Shaikh
Dept. of Computer Engineering
Don Bosco Institute of Technology
Mumbai-400 070, India
phiroj@dbit.in

***Abstract*— Opinion mining has become increasingly vital in today's digital world for making strategic decisions. With the volume of information increasing daily at a fast pace it becomes necessary to refine the information to efficiently analyze important and very vital data. Analysis of text to extract the emotions that are conveyed is a very important task, as analysis of text manually is time-consuming as well as may contain errors. Emojis have played a significant role in the digital world for communication and conveying various opinions.**

To solve these challenges an emotion detection model is introduced, that aims to address the issues related to accuracy of recognizing emotions by combining textual data and emojis. This model aids in various fields like sentiment analysis, mental health monitoring, feedback assessment.

This research begins its journey by the creation of a diverse data set that contains text-based content that are meticulously labeled. To prepare the content in the data various preprocessing tasks are undertaken such as tokenization, removal of stopwords, normalization of text. The model is built in a recurrent neural network that is designed for managing multimodal input and trained through multi-label classification to predict the appropriate emotion category.

Empirical formulas are referred to validate the model's effectiveness, which help in comparing the results obtained from text-only models in emotion recognition and emojis related sentiments. The aspects that set this model apart from the other models is its ability to adapt across platforms and languages, by recognizing the changing digital communication nature.

As the nature of digital communication keeps on evolving it is necessary that various analytical tools are also evolved in parallel to address the changes as they come.

Keywords*— *Emotion Detection, Text, Emoji, LSTM, RNN.

I. Introduction

Opinion mining is a critical study that involves the extraction of key aspects from a vast sea of content, and plays a key role in supporting decision-making. This makes it important to automate and streamline the data efficiently from the information that is online. The most important objective of this research is understanding the various emotions that are being conveyed through text, when analysis of the large text is done manually the accuracy of the result being error free is less and time-consuming.

Emojis play a significant role as they help to decipher the often-elusive emotions expressed in sarcastic text. To address these challenges an emotion detection model is introduced, that combines text as well as emoji data, which increases the accuracy in emotion recognition. This innovative model is used in diverse domains such as sentiment analysis in social media, feedback analysis in product review and mental health monitoring applications.

This research method combines various important steps. The initial step of this creation of a dataset that contains text-based content, that is meticulously labelled with detailed labels that can be easily identified by the model. The preprocessing phase involves essential tasks like tokenization, text normalization, etc which is extremely necessary to ready the data for analysis. In this model various features are engineered by analysing the data and techniques like word embeddings and emoji representations to efficiently capture the emotions in the input data provided. The model is a recurrent neural network designed to handle text input, which is trained using a multi-label classification approach to predict the most appropriate emotion from the categories for the input set. For the emoji interpretation, the emojis are extracted from the input and are converted to their text-based description, which is further sent to the model for further classification.

The results obtained from the experimental testing displays proof of the model's effectiveness. This particular model surpasses various text-only models of emotion detection as well as emoji-only sentimental analysis models, particularly in identifying emotions such as sarcasm that heavily rely on emojis.

In accordance with its implementation the model gives a notable achievement of accuracy rate of 94.19%. This accuracy is achieved by combining both text and emoji with text preprocessing being a vital step. This model implementation is developed using the Python programming language that is highly sort after in works like machine learning, deep learning, natural language processing, etc. with inclusion of an emoji database that further improves the model's ability to interpret emotions accurately. To train and evaluate the model datasets like training dataset that are typically used for model training and a validation dataset for evaluating its performance and generalization.

Hence, we get a more significant model for sentiment analysis and human-computer interaction by integrating the text and emojis in emotion detection. When both modalities are combinedly used the model displays a comprehensive understanding of the emotions in the digital content, that creates a positive environment for the users, mental health support and the overall quality of digital communication. As technology enriches digital communication and evolves with

Authorized licensed use limited to: University of Auckland. Downloaded on April 12,2026 at 00:48:54 UTC from IEEE Xplore. Restrictions apply.

respect to the changes, analytical tools like this must also be able to adapt changes in order to meet the growing needs of the users.

II. Literature Review

Analyzing the already existing systems based on sentiment analysis and emotion detection has made various noteworthy strides in unraveling the intricate patterns of emotions within textual data that are particularly prevalent in social media platforms. However despite the noteworthy work, one cannot ignore the gaps that are present in the current literature. In some studies there are integration of emojis in sentiment analysis underscored, they often fall short to elaborate a notable evaluation of model performance and good classification.

Furthermore, some studies describing contextual emotion detection overlook the aspects that emoji can offer in understanding the emotions of textual data. While, despite mentions of integrating text and emoji features in opinion mining, there has not been any considerable mentions of adaptability across languages and other aspects. Similarly in some research papers emotion detection within contextual conversations misses the chances to extract emojis for capturing various subtle emotions, particularly given the variations in emoji usage and interpretation across different linguistic and cultural groups.

In order to solve these issues the proposed research aims to develop and deploy a novel model of emotion detection that integrates emojis in sentiment analysis efficiency. By leveraging cutting edge methods in deep learning and natural language processing, this project will help to convey the emotions conveyed through textual data that are precisely in context where emojis play a significant role.

III. Methodology

A. Sentiment and Emotion

Sentiment and emotion are both terms related to human subjectivity, so they are sometimes used interchangeably in research without sufficient differentiation, which may lead to poor apprehension and confusion [1, 2]. As this study involves both sentiment and emotion, we need to clearly distinguish them[1].

Sentiment refers to an attitude, thought, or judgement prompted by a feeling [1, 2]. Usually, in NLP community, sentiment is considered to have three polarities, i.e., positive, negative, and neutral [1, 3]. Emotion refers to a conscious mental reaction subjectively experienced as strong feelings [1, 2]. Different from sentiment, emotion is more sophisticated. So far, there has not been one standard theory on categorizing emotions[1].

B. Design

In order to deliver precise sentiment analysis and emotional insights, the suggested emotion recognition algorithm is made to examine textual and emoji-based information. The system has a simple architecture designed to efficiently process input data. First, a varied dataset with text-based content that has been painstakingly annotated with precise emotional classifications is needed for the model.

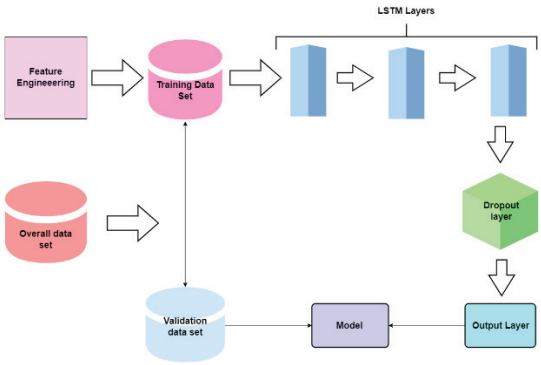

Fig. 1. Overall working of the system

The input data consists of both text as well as emojis. The emojis are extracted from the input data and is then converted to its associated text-based description. This text description is used as the input in the model. Tokenization, text normalisation, emoji extraction, etc are some of preprocessing procedures that make sure the data is ready for analysis. Next, word embeddings for textual material and emoji representations are used to engineer features. The subtle emotional undertones in the supplied data are captured by these features. A recurrent neural network with multimodal input handling capabilities is used in the model architecture.

To anticipate which emotional category is most appropriate for a particular input, the network is trained using a multi-label classification technique. Overfitting is prevented by the use of regularisation techniques, and grid search methods are employed to optimise the hyperparameters. TensorFlow and PyTorch, two well-known deep learning libraries, are used in the implementation's development, which makes training and assessment more effective. The system's capacity to adjust to many languages and platforms guarantees its efficacy in examining the varied terrain of digital communication.

C. Data Analysis

The training dataset comprises of 16,000 sentences, while the testing dataset consists of 2000 sentences. The training dataset, which comprised 16,000 phrases with corresponding emotion labels labelled on them, was thoroughly examined during the data analysis phase of this study project. Six main emotional categories are covered by the dataset: fear, love, surprise, anger, sadness, and joy. In order to learn more about the variety and frequency of emotional responses, the dataset's emotional distribution was carefully examined.

The basis for additional study was the counts of each class of emotions, which gave an overview of the relative frequency of each emotion group.

Emotion	Training	Validation
Joy	5362	704
Sadness	4666	550
Anger	2159	275
Fear	1937	212
Love	1304	178
Surprise	572	81

Fig. 2. Table showing counts of each emotion classes in each dataset

Authorized licensed use limited to: University of Auckland. Downloaded on April 12,2026 at 00:48:54 UTC from IEEE Xplore. Restrictions apply.

Descriptive statistics were employed to summarize the distribution of emotions within the dataset. Frequency counts were calculated for each emotion category, revealing the following distribution: joy (5362), sadness (4666), anger (2159), fear (1937), love (1304), and surprise (572). These counts provided an overview of the relative frequency of each emotion category and served as the basis for further analysis.

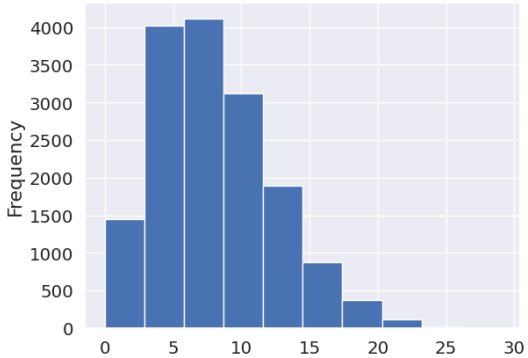

Fig. 3. Bar graph showing frequencies of stopwords in the dataset

A bar chart was created to show the count of each frequency in the dataset in order to visualise the distribution of stopwords throughout it. The bar chart gave a clear visual depiction of the distribution by highlighting the different stopword frequencies across the sample.

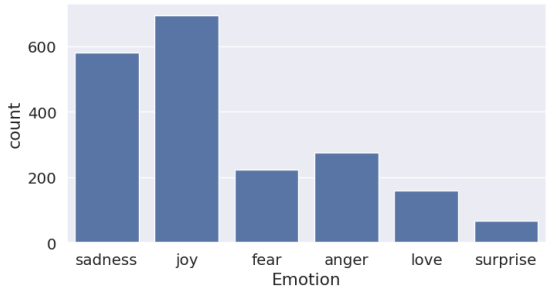

Fig. 4. Bar graph showing count of emotion labels in validation dataset

The distribution of the sentences throughout the emotion class in validation dataset was also shown as a bar graph in addition to a frequency analysis of the stopwords across the dataset. The bar chart provided a clear visual depiction of the distribution in the validation set by highlighting the different count of each emotion class labels over the dataset.

Additionally, measurements like range and standard deviation were used to look at the variety and distribution of emotions. These metrics provided information about the range of emotional variability recorded by the annotations, as well as the diversity and intensity of emotional expressions found in the dataset.

To investigate potential correlations between certain emotions or linkages with other variables in the dataset, inferential statistical studies were also carried out.

In general, the data analysis stage gave us a thorough grasp of the emotion of the content in the dataset, allowing us to spot trends, patterns, and possible correlations that influenced the creation of emotion detection models and advanced the fields of sentiment analysis and human-computer interaction.

D. Emoji Extraction

On receiving user input, the input data is segregated into text and emojis. These emojis are translated to their textual equivalents. In order to do so, the demojize() function in Python's Emoji package is used. The demojize() function converts the emoji unicode to the Unicode Common Locale Data Repository (CLDR) names. The input is then modified with the addition of this new emoji representation (CLDR name) and then fed into the model for further text preprocessing.

E. Text Preprocessing

To begin, we first send the text through text preprocessing, which is necessary to ensure that the text is cleaned and normalized for analysis which is more accurate. The first step was removing duplicated text. The repeated texts were identified and dropped. The next method was lemmatization. Removal of numbers, punctuations, URLs, etc from the texts was carried out. Sentences with less than three words was also dropped. The text was then converted to lowercase. In this way, the sentences were converted to normalized sentences. The emotion classes are also labelled in this stage. This preprocessing stage is crucial for preparing the data for further analysis.

F. Word Embedding

One method for converting text data into numerical representations is GloVe word embedding. To mitigate the discrete nature of words, word embedding approaches like GloVe (Global Vectors for Word Representation) are offered in natural language processing (NLP) to encode each word into a continuous vector space. GloVe uses a global 200-dimensional word-word co-occurrence matrix, which records the frequency of word co-occurrences in a particular corpus, to learn word embeddings. There are in all 4,00,000 word vectors in the GloVe embeddings used for this project. Of which, 13,243 words were converted and 1081 words were unable to be embedded as the vectors were unavailable. This approach allows words that frequently appear together in similar contexts to be represented as similar vectors, thereby capturing the semantic relationships among words. GloVe uses the total co-occurrence statistics of words in the corpus to forecast surrounding words, in contrast to the skip-gram technique, which looks at individual samples in the corpus to make this prediction. By capturing the semantic linkages between words, this strategy improves the model's comprehension and analysis of textual information.

G. Long Short-Term Memory

Recurrent neural network (RNN) [1, 4] is a kind of neural network specialized for processing sequential data such as texts. It can leverage knowledge from both the past and the current step to predict outcomes[1]. At each time step t, the unit takes both the current input and its hidden state from the previous time step as the input[1]. Formally, given a sequence of word vectors $[x_1, x_2,..., x_L]$, at time step t, the output $h^{(t)}$ (i.e., the hidden state at time step $t+1$) of the RNN can be computed as[1]:

$$h^{(t)} = f\left(h^{(t-1)}, x_t\right)$$

Due to the recurrent nature, RNN is able to capture the sequential information, which is important for NLP tasks [1].

Authorized licensed use limited to: University of Auckland. Downloaded on April 12,2026 at 00:48:54 UTC from IEEE Xplore. Restrictions apply.

However, due to the well-known gradient vanishing problem, vanilla RNNs are difficult to train to capture long-term dependency for sequential texts[1]. To address this problem, LSTM [5] introduces a gating mechanism to determine when and how the states of hidden layers can be updated [1]. Each LSTM unit contains a memory cell, an input gate, a forget gate, and an output gate [1]. The input gate controls the input activations into the memory cell, and the output gate controls the output flow of cell activations into the rest of the network [1]. The memory cells in LSTM store the sequential states of the network, and each memory cell has a self-loop whose weight is controlled by the forget gate [1]. Formally, given the input $x = [x_1, x_2,...,x_L]$, at time step t, LSTM computes unit states of the network as follows[1]:

$$i^{(t)} = \sigma\left(U_i x_t + W_i h^{(t-1)} + b_i\right),$$

$$f^{(t)} = \sigma\left(U_f x_t + W_f h^{(t-1)} + b_f\right),$$

$$o^{(t)} = \sigma\left(U_o x_t + W_o h^{(t-1)} + b_o\right),$$

$$c^{(t)} = f_t \odot c^{(t-1)} + i^{(t)} \odot \tanh\left(U_c d_t + W_c h^{(t-1)} + b_c\right),$$

$$h^{(t)} = o^{(t)} \odot \tanh\left(c^{(t)}\right),$$

where $i^{(t)}$, $f^{(t)}$, $o^{(t)}$, $c^{(t)}$, and $h^{(t)}$ denote the states of the input gate, forget gate, output gate, memory cell, and hidden layer at time step t; σ and tanh denote sigmod and tanh activation functions that crop/normalize activation values; W, U, b, and ⊙ denote the recurrent weights, input weights, biases, and element-wise product, respectively [1].

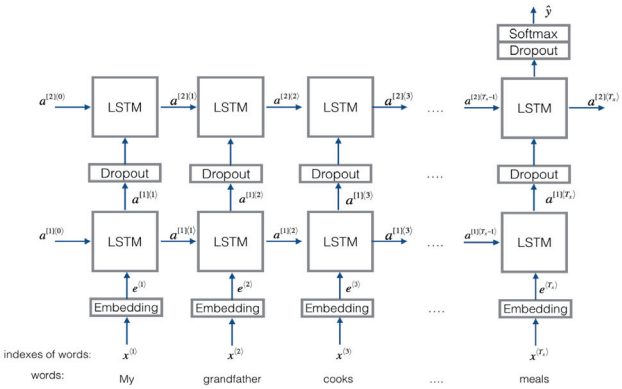

Fig. 5. Working of an LSTM model

The model first associates each word with its word embedding. The words that are not found in the GloVe embeddings are denoted as zeroes. It is then converted to a one-hot binary encoded version, wherein according to the order of importance of the word, the position is indexed in the array. The maximum size array of the array is 229, based on the length of the longest input text sentence. The RNN is created based on this length. Based on this array, the network is created with respect to the contextual relationship between the words using the previously mentioned formulae.

Ultimately, this methodology helped us create and put into use a text- and emoji-based system that recognises users' emotions and feelings during communication or feedback-giving.

IV. Results

The model is fit according to a batch size of 256. Hence the training dataset has a total of 63 in each epoch. There are a total 30 epochs that the model trains in. In case of increase in losses, the model uses a callback function and stops the training. The validation results show a loss of 0.1353 and an accuracy of 94.19%, showing that the model performs well and can generalize to previously unknown data. In contrast, after training, the model obtained a little larger loss of 0.1695 while maintaining an accuracy of 92.85%. This shows that, aside from working well on training data, the model successfully generalizes to new cases, as seen by the reduced loss and improved accuracy on the validation set.

In fig. 6, the graph of validation and testing accuracy displays an increase over epochs, demonstrating that the model's performance increases with each training iteration. There may be some oscillations at first, but there is a definite increasing pattern that indicates the model's learning process.

In contrast, in fig. 7, the graph illustrating validation and testing losses shows a decreasing pattern across epochs, indicating that the model's loss function decreases as training improves. This graph demonstrates that the model's predictive ability increases continuously, as seen by decreasing loss values.

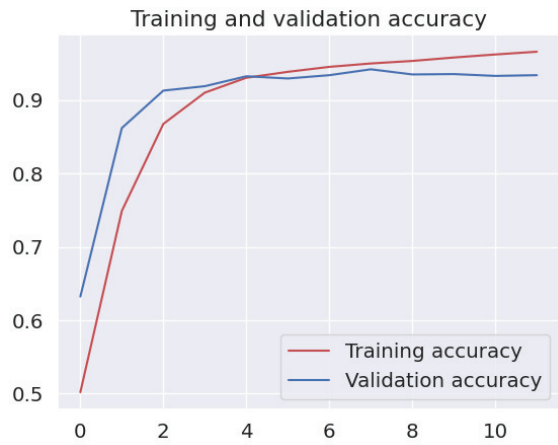

Fig. 6. Graph of Validation and Testing Accuracy

Fig. 7. Graph of Validation and Testing Losses

As shown in Fig. 8, the model's overall accuracy has been determined at 93% based on a testing dataset of 2000 cases. Furthermore, the macro average F1-score, which examines the average efficiency across all classes without regard for class imbalance, is 0.88. The weighted average F1-score, which indicates the percentage of each class in the dataset, is

Authorized licensed use limited to: University of Auckland. Downloaded on April 12,2026 at 00:48:54 UTC from IEEE Xplore. Restrictions apply.

similarly 0.93. These findings show that the model works well in properly identifying emotions across multiple classes, with specifically good accuracy and recall scores for most emotions. However, it works rather poorly in identifying surprise, as seen by lower accuracy, recall, and F1-score values for this emotion. Overall, the model performs well in emotion identification, showing possible applications in advanced sentiment analysis.

	Precision	Recall	F1-Score	Support
0	0.91	0.96	0.93	275
1	0.92	0.90	0.91	224
2	0.93	0.96	0.94	695
3	0.85	0.79	0.82	159
4	0.97	0.96	0.96	581
5	0.85	0.62	0.72	66
Accuracy	0.93	0.87	0.93	2000
Macro Average	0.90	0.86	0.88	2000
Weighted Average	0.93	0.93	0.93	2000

Fig. 8. Table depicting classification report

The confusion matrix of the model's performance on the testing dataset is as follows:

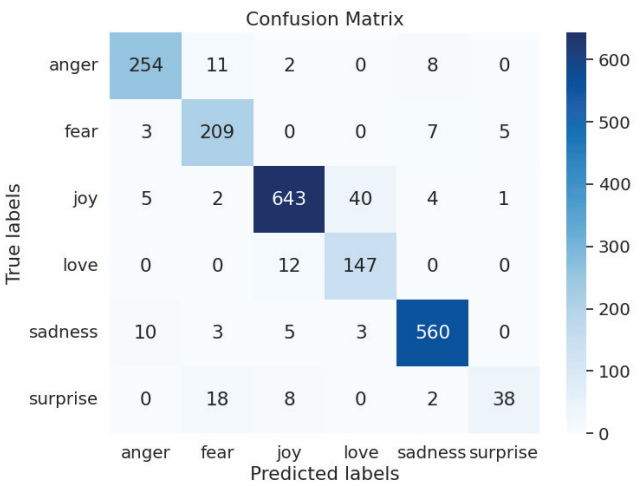

Fig. 9. Confusion Matrix of the LSTM model

For comparing the LSTM model's performance with other models, a few predefined models were used to run over the training and testing dataset. The models used are Random Forest, Logistic Regression, Support Vector Machine and Decision Tree. The models gave an accuracy as follows:

Model	Accuracy (%)
Random Forest	89
Logistic Regression	87
Support Vector Machine	87
Decision Tree	86

Fig. 10. Comparison of other models' performance

This proves that the LSTM model shows higher accuracy in the emotion detection system.

V. CONCLUSION

In conclusion, this research initiative has effectively fulfilled its principal aims, culminating in the development of a comprehensive emotion detection system with far-reaching implications for sentiment analysis and human-computer interaction. The results that were obtained underscore the durability and efficiency of the proposed model.

The validation results show that the model performs well and can effectively generalize to new data, with a loss of 0.1353 and an accuracy of 94.19%. On the other hand, the model demonstrated a slightly elevated loss of 0.1695 combined with an accuracy of 92.85% during the training phase. The model gives an overall accuracy of 93% which is higher than the other pre-defined models' accuracy. The model's dual performance shows that, in addition to learning from the training set efficiently, it is also more adaptive to unexpected circumstances, as seen by the higher accuracy and lower loss in the validation set.

These results further highlight the importance of the multimodal strategy that was used, which smoothly combines textual inputs with emojis to give a good understanding of emotional content in digital communication. Sentiment analysis, user-centric experiences, and mental health support are just a few of the applications where the model helps to improve the quality of digital interactions by catching subtleties and contextually contingent feelings that are typically missed by standard approaches.

In conclusion, the created emotion detection system provides a strong and contextually-aware solution that bridges the gap between textual and emoji-based emotion interpretation, demonstrating the efficiency of its design. In today's changing digital landscape, the system has great potential to significantly advance sentiment analysis, human-computer interaction, and the overall quality of digital communication due to its high accuracy, multimodal framework, and effective preprocessing.

VI. FUTURE SCOPE

We've seen tremendous scope for future applications by developing emotion detection systems that are integrated with advanced artificial intelligence technologies, such as deep learning and natural language processing(NLP). By utilizing these methods to the fullest, we can enhance the accuracy of the models in detecting and interpreting emotions from different sources of digital communication, including social media posts, emails and others. It can also be used in automating product feedback analysis by inculcating emoji interpretation as a factor. Social media mental health proctoring can also be done by increasing the complexity of the model. The integration helps the system adapt and improve in response to new trends and modifications in patterns of digital communication, thus making sure that the relevance is maintained within these human-computer interactions.

For this purpose, we need to reconfigure the system in accordance with the complexities of deep learning models and NLP algorithms, incorporating state-of-the-art techniques for feature extraction, sentiment analysis and emotion classification and detection.

One potential benefit for this innovative approach is its ability to accommodate more personalized and relevant interactions between humans and computers leading to user satisfaction and engagement. Moreover, by enabling real-time analysis and interpretation of emotional cues in digital communication, the system could support various applications, including personalized recommendations, targeted advertising,

Authorized licensed use limited to: University of Auckland. Downloaded on April 12,2026 at 00:48:54 UTC from IEEE Xplore. Restrictions apply.

and mental health support services. Therefore, this method of advanced AI technologies into the emotion detection system promises to drive innovations and create new opportunities to enhance understanding of computers and humans in this digital age.

ACKNOWLEDGMENT

At this stage, researching to this depth would indeed be a challenging task without proper guidance. We would like to express our sincere appreciation to our project guide, Dr. Phiroj Shaikh. He has consistently guided us and sparked our curiosity into this topic which was earlier completely new to us. He has been exceptionally motivating, accommodating and understanding throughout the time period we spent working under him for this project.

We are grateful to the entire Computer Department of Don Bosco Institute of Technology for their constant support, advice and assistance. We are deeply grateful to the management of Don Bosco Institute of Technology for their infrastructure and constant motivation and support, without which this would not be possible.

REFERENCES

[1] Zhenpeng Chen, Yanbin Cao, Huihan Yao, Xuan Lu, Xin Peng, Hong Mei, and Xuanzhe Liu. 2021. Emoji-powered Sentiment and Emotion Detection from Software Developers' Communication Data. ACM Trans. Softw. Eng. Methodol. 30, 2, Article 18 (April 2021), 48 pages, doi: 10.1145/3424308.

[2] Myriam Munezero, Calkin Suero Montero, Erkki Sutinen, and John Pajunen. 2014. Are they different? Affect, feeling, emotion, sentiment, and opinion detection in text. IEEE Trans. Affect. Comput. 5, 2 (2014), 101–111.

[3] Bing Liu. 2012. Sentiment Analysis and Opinion Mining. Morgan & Claypool Publishers.

[4] David E. Rumelhart, Geoffrey E. Hinton, and Ronald J. Williams. 1988. Learning representations by back-propagating errors. Nature 323, 6088 (1988), 533–536.

[5] Sepp Hochreiter and Jürgen Schmidhuber. 1997. Long short-term memory. Neural Computation 9, 8 (1997), 1735– 1780.

[6] H. Sakode, T. L. Surekha, M. D. Sri, and G. B. Kumar, "Sentiment Analysis using Text and Emoji's," 2023 International Conference on Inventive Computation Technologies (ICICT), Lalitpur, Nepal, 2023, pp. 627-634, doi: 10.1109/ICICT57646.2023.10134459.

[7] P. Chandra et al., "Contextual Emotion Detection in Text using Deep Learning and Big Data," 2022 Second International Conference on Computer Science, Engineering and Applications (ICCSEA), Gunupur, India, 2022, pp. 1-5, doi: 10.1109/ICCSEA54677.2022.9936154.

[8] B. E. Tegicho and C. Graves, "Automatic Emoji Insertion Based on Environment Context Signals for the Demonstration of Pervasive Computing Features," SoutheastCon 2021, Atlanta, GA, USA, 2021, pp. 1-6, doi: 10.1109/SoutheastCon45413.2021.9401878.

[9] T. LeCompte and J. Chen, "Sentiment Analysis of Tweets Including Emoji Data," 2017 International Conference on Computational Science and Computational Intelligence (CSCI), Las Vegas, NV, USA, 2017, pp. 793-798, doi: 10.1109/CSCI.2017.137.

[10] S. Al-Azani and E. -S. M. El-Alfy, "Early and Late Fusion of Emojis and Text to Enhance Opinion Mining," in IEEE Access, vol. 9, pp. 121031-121045, 2021, doi: 10.1109/ACCESS.2021.3108502.

[11] Y. Pamungkas, A. D. Wibawa and Y. Rais, "Classification of Emotions (Positive-Negative) Based on EEG Statistical Features using RNN, LSTM, and Bi-LSTM Algorithms," 2022 2nd International Seminar on Machine Learning, Optimization, and Data Science (ISMODE), Jakarta, Indonesia, 2022, pp. 275-280, doi: 10.1109/ISMODE56940.2022.10180969.

[12] Z. Jianqiang and G. Xiaolin, "Comparison Research on Text Pre-processing Methods on Twitter Sentiment Analysis," in IEEE Access, vol. 5, pp. 2870-2879, 2017, doi: 10.1109/ACCESS.2017.2672677.

[13] U. Rashid, M. W. Iqbal, M. A. Skiandar, M. Q. Raiz, M. R. Naqvi, and S. K. Shahzad, "Emotion Detection of Contextual Text using Deep learning," 2020 4th International Symposium on Multidisciplinary Studies and Innovative Technologies (ISMSIT), Istanbul, Turkey, 2020, pp. 1-5, doi: 10.1109/ISMSIT50672.2020.9255279.

Authorized licensed use limited to: University of Auckland. Downloaded on April 12,2026 at 00:48:54 UTC from IEEE Xplore. Restrictions apply.